Q090

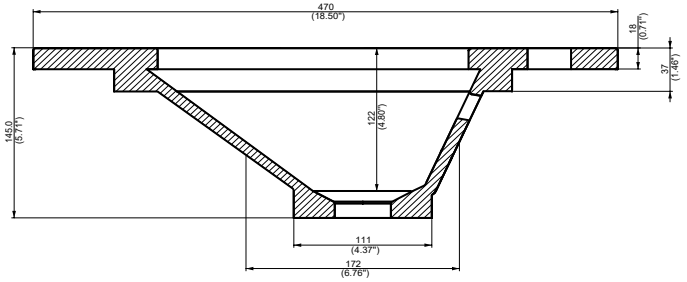
470
(18.50")
18
(0.71")
37
(1.46")
145.0
(5.71")
122
(4.80")
111
(4.37")
172
(6.76")

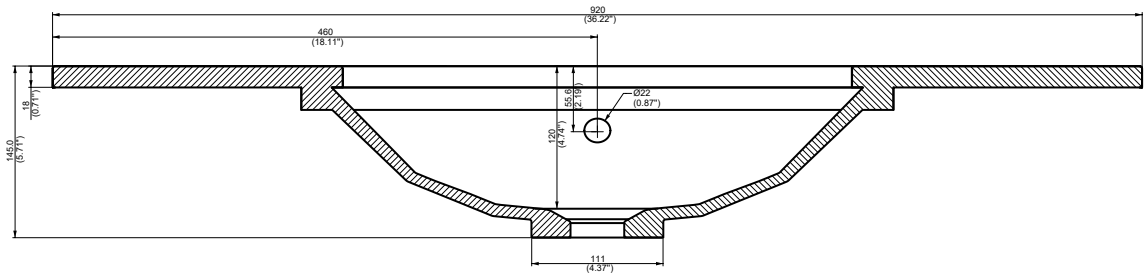
920
(36.22")
460
(18.11")
18
(0.71")
55.6
(2.19")
Ø22
(0.87")
145.0
(5.71")
120
(4.72")
111
(4.37")

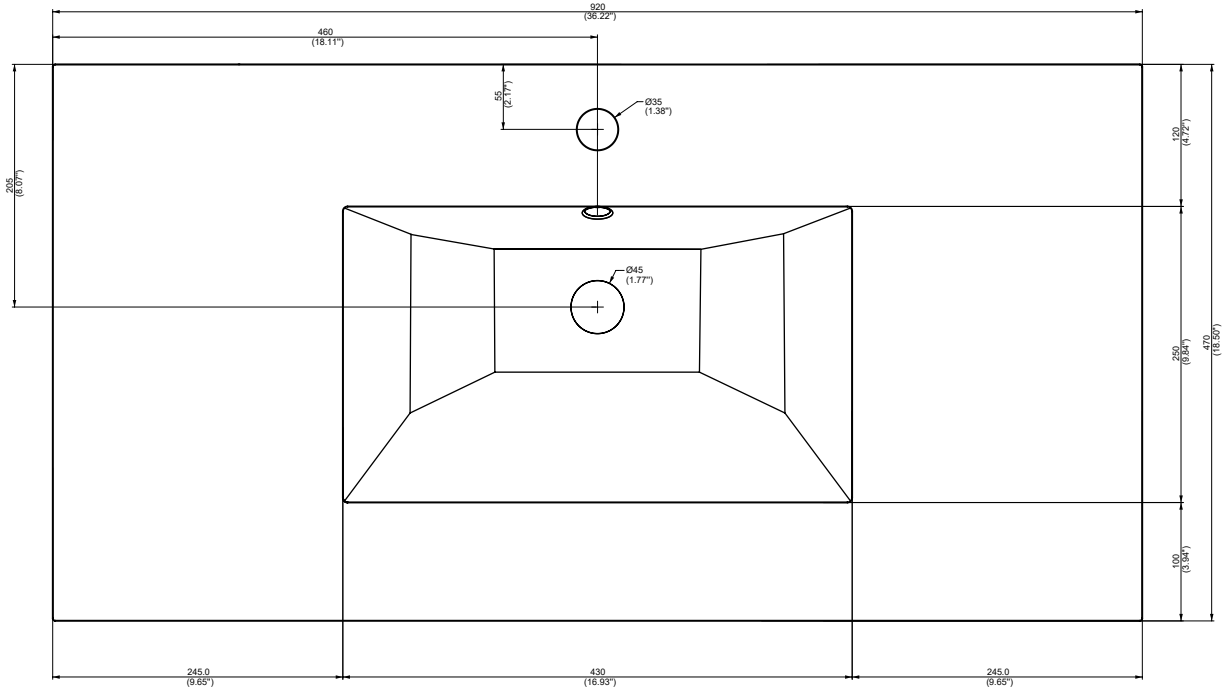
920
(36.22")
460
(18.11")
55
(2.17")
Ø35
(1.38")
205
(8.07")
Ø45
(1.77")
120
(4.72")
250
(9.84")
470
(18.50")
100
(3.94")
245.0
(9.65")
430
(16.93")
245.0
(9.65")